[illegible]…

カワムラサイクル

保管用
よくお読みください
保証書別途

[illegible]

KM-SR1

[illegible]

[illegible] [illegible]

[illegible] [illegible]

[illegible] [illegible]

[illegible] 4

4[illegible] 5

[illegible]

※ [illegible]

KAWAMURA 株式会社カワムラサイクル

[illegible] ※[illegible]

[[illegible]]

警告 [illegible]

注意 [illegible]

禁止 [illegible]

※ [illegible]

禁止
● [illegible] ● [illegible]

警告
●[illegible] ●[illegible] ●[illegible] ●[illegible] ●[illegible] ●[illegible] ●[illegible] ●[illegible] ●[illegible] ●[illegible] ●[illegible] ●[illegible] ●[illegible]

⚠ 注 意

●

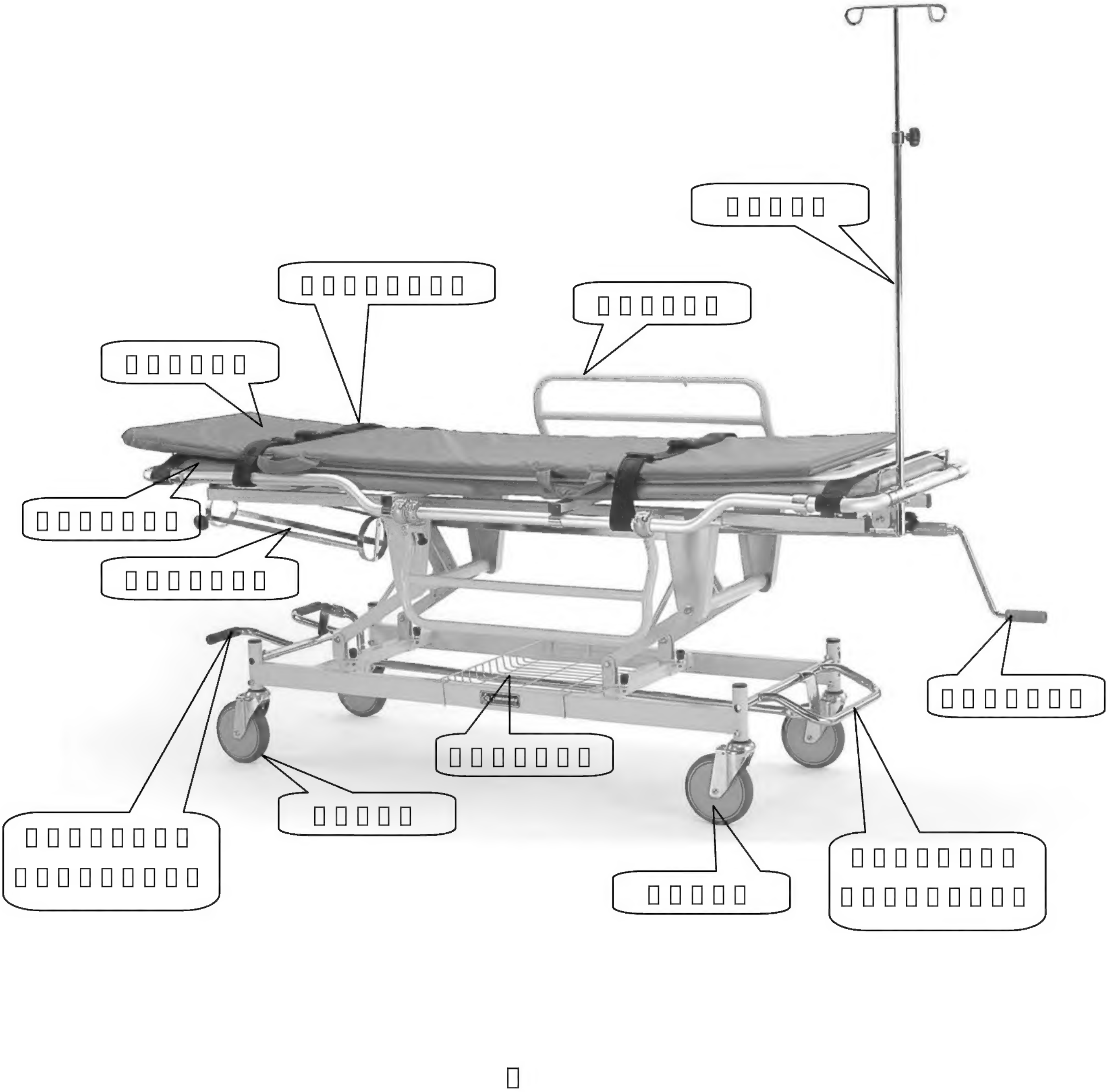

[illegible]

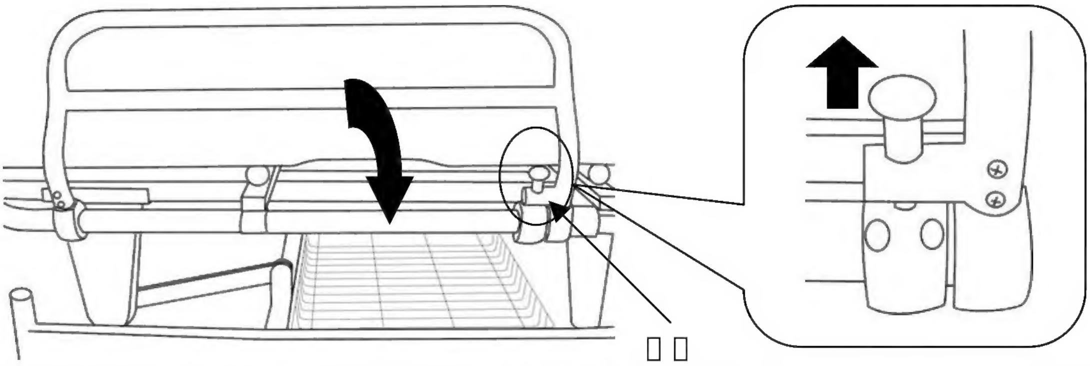

⚠ 注 意

[illegible]

⚠ 注 意

[illegible]

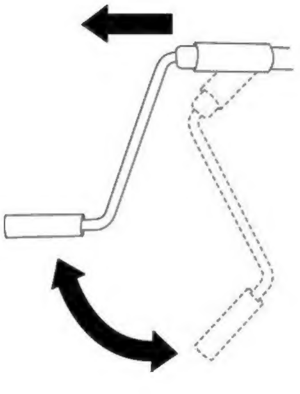

[illegible]

⚠ 注 意

[illegible]

[illegible]

[illegible]

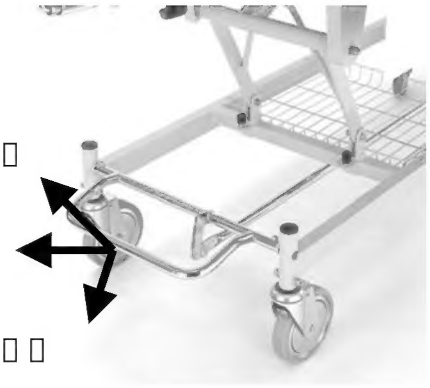

⚠ 注意
● [illegible]
● [illegible]
● [illegible]

3. [illegible]

[illegible]	[illegible]
	KM-SR1
[illegible] （mm）	[illegible]
[illegible] （mm）	[illegible]
[illegible] （mm）	[illegible]
[illegible] （Kg）	[illegible]
[illegible] （mm）	[illegible]
[illegible]	[illegible]
[illegible]	[illegible]
[illegible]	[illegible]
[illegible]	[illegible]
[illegible]	[illegible] 150mm [illegible]
[illegible]	[illegible] 105mm [illegible]

4. [illegible]

★[illegible]

[illegible]
[illegible] 1 [illegible]
[illegible] 1 [illegible]

★[illegible]

[illegible] 5 [illegible]
[illegible]

★[illegible]

[illegible]

★[illegible]

[illegible]
[illegible]

★[illegible]

[illegible]
[illegible]
[illegible]
[illegible]
[illegible]
[illegible]

[illegible]
[illegible]

株式会社カワムラサイクル
KAWAMURA

DNV MGMT. SYS. RvA C024 MGMT. SYS. RvA C425
ISO 9001 & 14001 REGISTERED FIRM
DNV Certification B.V. THE NETHERLANDS
00898-2004-AQ-KOB-RvA / 00898-2004-AE-KOB-RvA
本社・神戸工場・神戸第二工場・いなみの工場・本店サービスセンター

■[illegible] [illegible]651-2411 [illegible] 3−9−1 TEL078-969-2800

■[illegible] [illegible]651-2411 [illegible] 3−9−1 TEL078-969-2820

■[illegible] [illegible]110-0013 [illegible] 1−8−3 TEL03-3874-3511

■[illegible] [illegible]220-0073 [illegible] 2−12−[illegible] TEL045-290-9585

■[illegible] [illegible]487-0027 [illegible]−[illegible]−11 TEL0568-52-4800

■[illegible] [illegible]564-0044 [illegible]−20−10 TEL06-6190-8488

■[illegible] [illegible]819-0055 [illegible]−18−3 TEL092-882-4722

■[illegible] ■[illegible] ■[illegible] ■[illegible]

[illegible]

[illegible]

2008.12